ETHERNET PRODUCTS

VSC7398

VITESSE®

SparX-G8e™–Enhanced 8-Port Integrated Gigabit Ethernet Switch with Transceivers

8-PORT WEB MANAGED/UNMANAGED SMB SWITCH:

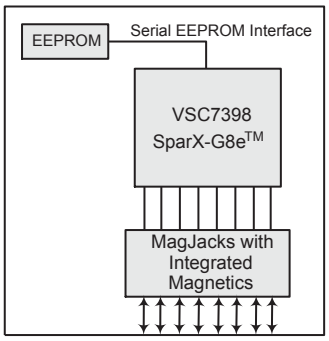

FEATURES:	BENEFITS:
8 Gigabit Ethernet ports with nonblocking wire-speed performance	Ensures maximum data throughput in highly loaded networks
8 tri-speed (10/100/1000 Mbps) copper transceivers (IEEE 802.3ab compliant), 2 of which (multiplexed internally) can be used as tri-speed (RGMII/GMII) interface	Reduces the need for any PHY components thereby significantly reducing overall systems cost
176 kilobytes on-chip frame buffer	Eliminates the need for external buffer memory while maintaining high peak load performance
SNMP and Web-based management with either V-Core CPU (on-chip 8051 CPU with royalty-free, Web-managed software stack) or off-chip 8-bit CPU	Enables advanced switch management, using run-time protocols, and low cost unmanaged/Web-managed operation
DSCP remarking for both IPv4 and IPv6 frames	Enables LAN edge products to generate standard priority that can be used in the core network
Jumbo frame support at all speeds (10/100/1000 Mbps)	Connects effortlessly to networks, hosts, and controllers that use up to 9.6-kilobyte frames
Programmable multilayer classifier with 4 QoS classes	Optimizes network performance to support any digital stream, from internet browsing to VoIP and video
8 k MAC addresses and 4 k VLANs (IEEE 802.1Q), as well as 8 k IP multicast group support	Stores a large amount of stations at wire-speed in the on-chip MAC Table, ensuring optimal network performance and scalability
Flexible link aggregation support based on Layer-2 through Layer-4 information (IEEE 802.3ad)	Provides high bandwidth uplinking abilities
Full-duplex flow control (IEEE 802.3X) and half-duplex backpressure, symmetric and asymmetric	Ensures lossless data transmission while supporting existing legacy Ethernet equipment
Multicast and broadcast storm control, as well as flooding control	Eliminates unwanted flooding of ports, and thereby increases overall network performance
Multiple protocol support: IEEE 802.1D, IEEE 802.1w, IEEE 802.1s, and IEEE 802.1X	Supports complex network topologies with fast failure recovery and access control
Wire-speed automatic learning and aging	Reduces CPU overhead and enables the CPU to allocate additional cycles for protocol processing
Vitesse VeriPHY™ cable diagnostics and SimpliPHY™ magnetics technology	Enables real-time cable diagnostics and low cost magnetics

APPLICATIONS:

- 8-port unmanaged Gigabit Ethernet SMB/SOHO switch
- 8-port Web-managed Gigabit Ethernet SMB/SOHO switch

VPPD-01353
Revision 1.0

VSC7398

SparX-G8e™–Enhanced 8-Port Integrated Gigabit Ethernet Switch with Transceivers

GENERAL DESCRIPTION:

VSC7398 SparX-G8e is the highly integrated, single-chip Gigabit Ethernet switch with 8 Integrated GbE Copper PHY ports. As part of the Vitesse SparX™ Family of Switches, SparX-G8e delivers high performance with easy migration paths, and comprehensive system solutions that enable ultra-short time-to-market and market-leading system cost.

A Vitesse Switch Family Member

SparX-G8e is a part of the Vitesse SparX™ Family Of Unmanaged or Web-managed Switches, taking the family into a new generation of integration. With its eight integrated tri-speed Gigabit Ethernet copper transceivers (with the option of multiplexing two as tri-speed RGMII/GMII), and several integrated management interfaces, it is specifically targeted at SMB and SOHO unmanaged applications; with its V-Core CPU (on-chip 8051) and parallel CPU interface, it enables Web-managed and managed switch applications.

Being a member of the switch family provides a number of unique advantages when designing with the chip: there is nearly 100% software compatibility between the switch family members; software written for SparX-G8e can easily be used with other switch configurations in the family, and vice-versa; and with minimal effort and time, designs can be upgraded to higher port counts, or migrated to other configurations or future technology. Building a product family is easy when designing with Vitesse switches!

The Vitesse SparX™ Family Of Switches

SparX-G8e shares the unique traits of the Vitesse SparX Family Of Switches. The highly integrated switch supports 136 kilobytes of on-chip frame buffer, and the integration of the copper PHY as well as an internal oscillator circuit simplifies PCB layout to reduce time and cost. Further trimming down system cost is the industry's lowest power, fully integrated, Switch-plus-Copper PHY technology.

The switches provide for high performance designs with their nonblocking, wire-speed performance, which includes wire-speed MAC address learning.

SPECIFICATIONS:

- 25 MHz LVTTL reference clock
- 1.2 V core power supply
- 3.3 V interface power supply

Designing both unmanaged and Web-managed solutions is straightforward. The chips offer an internal V-Core CPU (on-chip 8051) and serial and parallel CPU interfaces, and support a host of management protocols such as GxRP, SNMP, and three flavors of Spanning Tree: Standard STP, Multiple STP, and Rapid STP.

Controlling networks operated by the Vitesse switches is simple; advanced classification with IPv4 and IPv6 support, along with port DSCP remarking and 802.1X authentication support, provides flexible QoS operation. This is backed up by Layer 2-4 link aggregation and VLAN support, enabling managed switches to be deployed.

With its unique low power dissipation, the VSC7398 enables fanless operation, thereby providing higher system reliability and lower noise, both to the benefit of the user.

Designing with Vitesse SparX Family Of Switches means designing with the complete Vitesse solution: Vitesse provides a comprehensive, Web-managed switch software system for the V-Core CPU (internal 8051). This is in addition to the unmanaged and smart managed software systems for 8051, which are also included. For homegrown software development, the Vitesse full platform and OS independent switch API is supplied. Accompanying the software systems are the Vitesse Switch reference systems. These are production-ready hardware designs that also serve as evaluation platforms. The Vitesse solution is supplied with a comprehensive collateral package, including software source code, full documentation, and an in-depth qualification report for easy pre-evaluation.

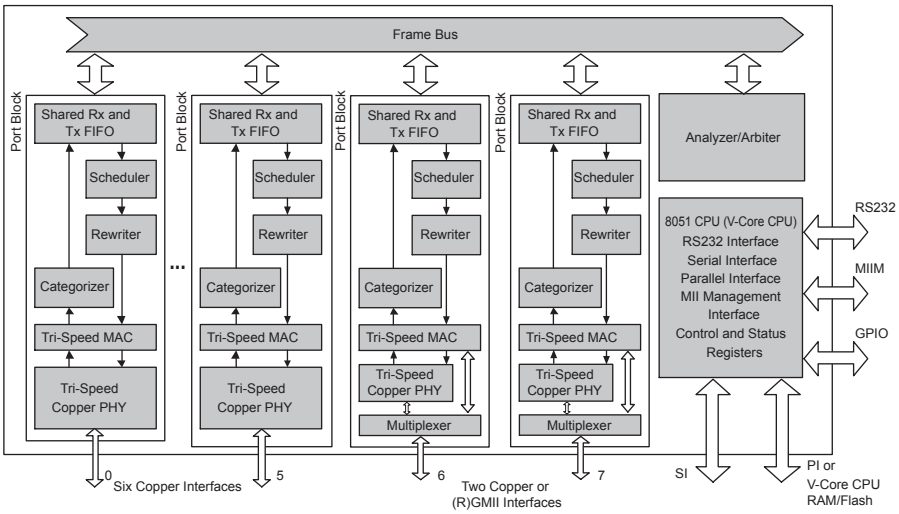

Trademarks ™
Vitesse, ASIC-Friendly, FibreTimer, TimeStream, Snoop Loop, Super FEC, FOCUSConnect, Meigs-II, Meigs-IIe, Lansing, Campbell-I, Barrington, PaceMaker, HOVCAT48, HOVCAT48e, HOVCAT192, HOVCAT192e, Micro PHY, FOCUS32, FOCUS16, IQ2200, NexSAS, VersaCAT, GigaStream, HawX, SparX, StaX, VstaX, SimpliPHY,VeriPHY, ActiPHY, XFP PRO, SFP PRO, Smart-LINK, OctalMAC, EQ Technology are trademarks in the United States and/or other jurisdictions of Vitesse Semiconductor Corporation. All other trademarks or registered trademarks mentioned herein are the property of their respective holders.

Copyright © 2005
Vitesse Semiconductor Corporation ("Vitesse") retains the right to make changes to its products or specifications to improve performance, reliability or manufacturability. All information in this document, including descriptions of features, functions, performance, technical specifications and availability, is subject to change without notice at any time. While the information furnished herein is held to be accurate and reliable, no responsibility will be assumed by Vitesse for its use. Furthermore, the information contained herein does not convey to the purchaser of microelectronic devices any license under the patent right of any manufacturer.

741 Calle Plano
Camarillo, CA 93012, USA
Tel: +1 805.388.3700
Fax: +1 805.987.5896
www.vitesse.com
sales@vitesse.com